Festive Lights™

Outdoor Candle Holder

Outdoor use

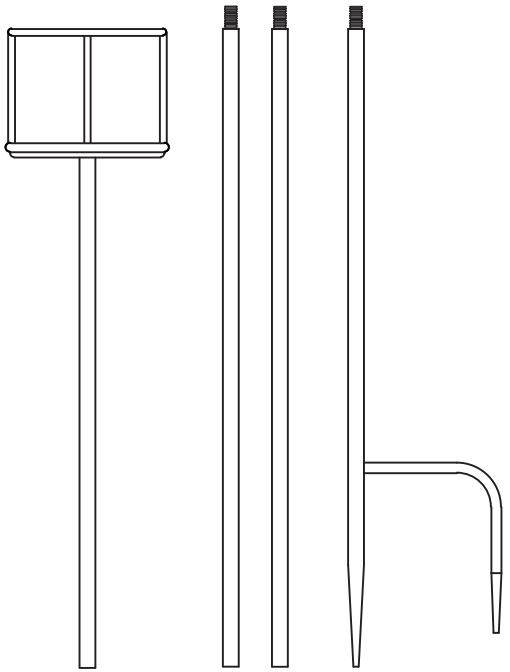

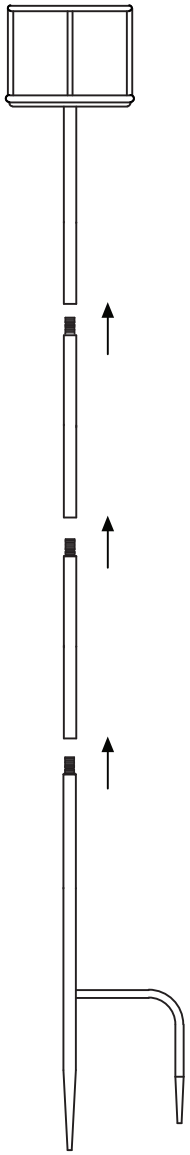

Option 1.

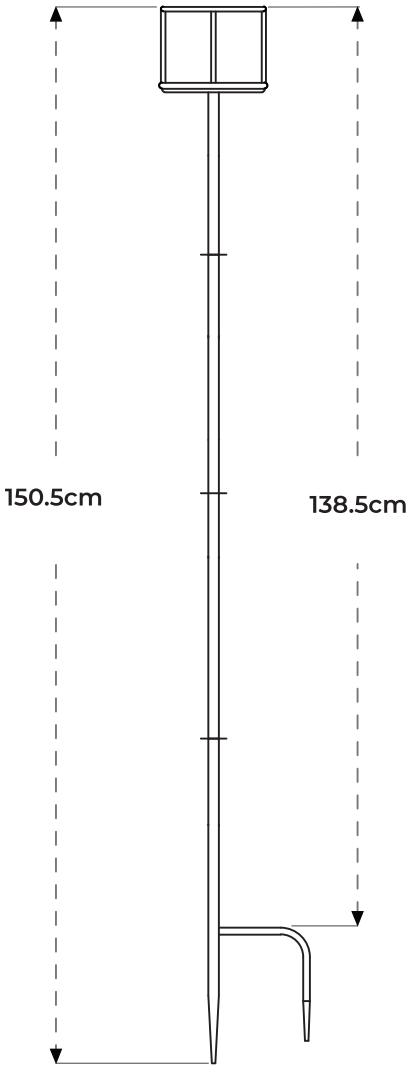

Option 2.

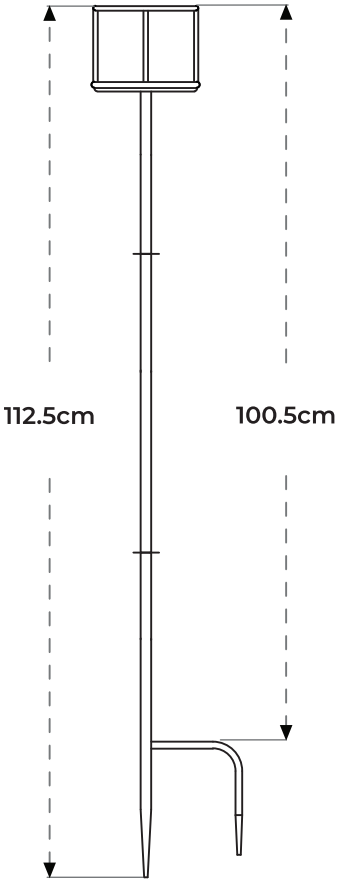

Option 3.

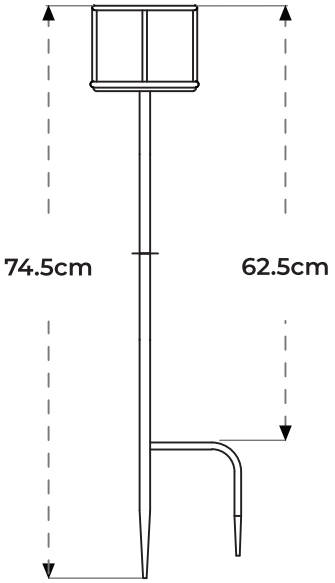

This product comes with a 12 month manufacturer's warranty against failure to all parts. If you have a warranty claim, please use the contact details below. For any technical information relating to this product, please email Festive Lights Ltd on contact@festive-lights.com. We aim to respond within 2 working days. Alternatively, please contact our help line on +44 (0)1257 792111. This service is available between 9.00am-5.00pm Monday to Friday.

UK importer: Festive Lights Ltd, Preston Road, Charnock Richard, Chorley, Lancashire, PR7 5HH

EU importer: Festive Lights BV, Kieftsbeeklaan 1, 7607 TA Almelo, Netherlands